REVISION HISTORY			
REV.	DESCRIPTION	DATE	DRAWN BY
1	ORIGINAL PRINT	9/30/2024	P. YEUNG

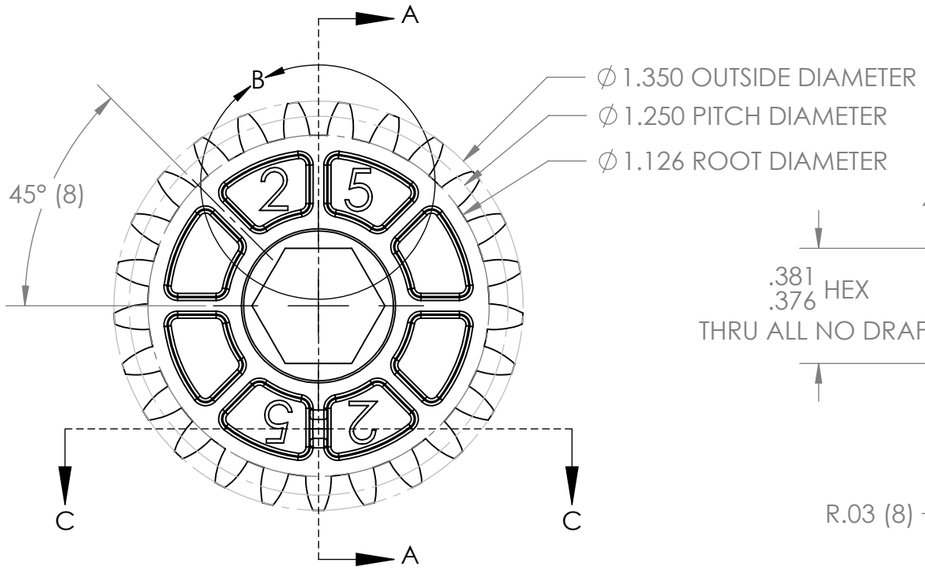

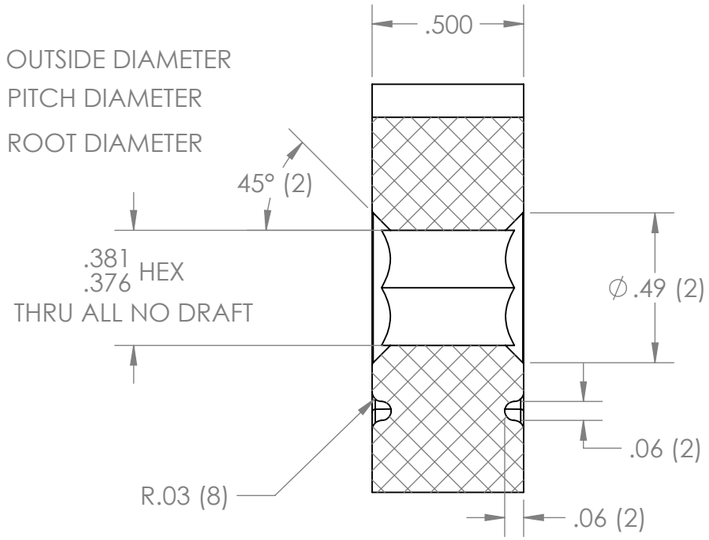

SECTION A-A

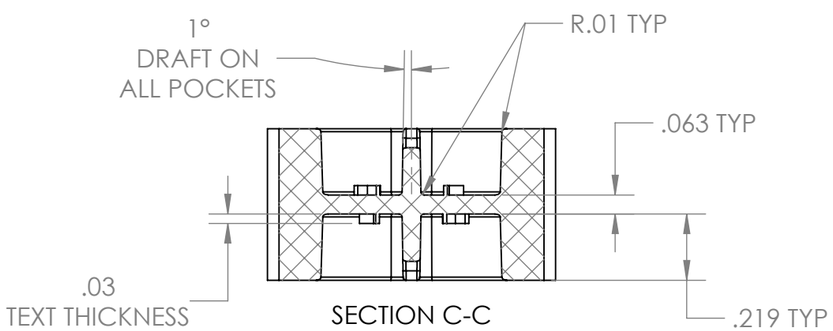

SECTION C-C

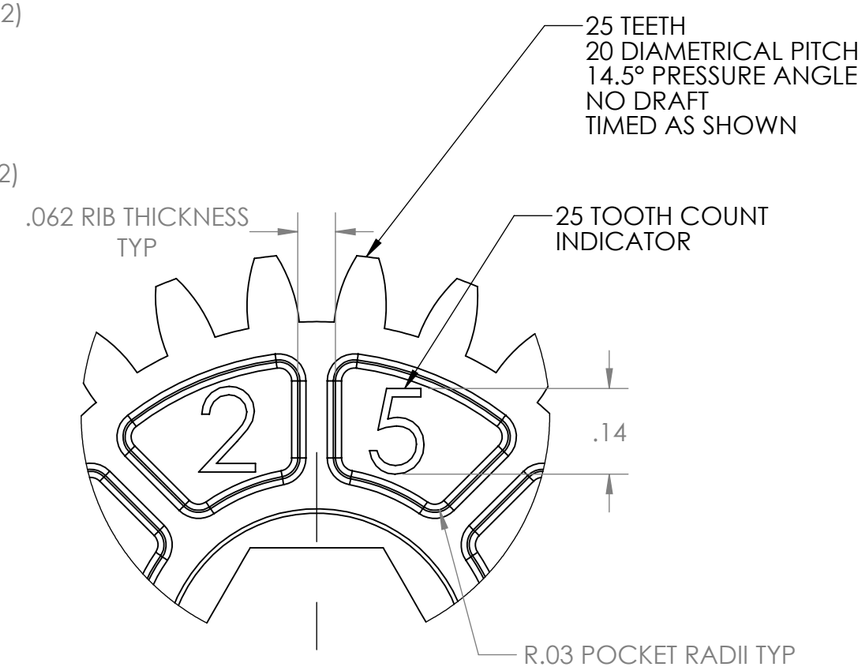

DETAIL B
SCALE 4 : 1

*** SEE CAD FOR ADDITIONAL TOOLPATH INFO***

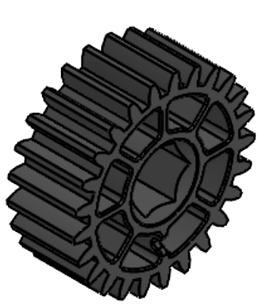

UNLESS OTHERWISE SPECIFIED:	COMMENTS:
DIMENSIONS ARE IN INCHES	DUAL DIMENSIONS ARE IN MILLIMETERS.
TOLERANCES:	BREAK ALL SHARP EDGES.

FRACTIONAL	±1/16
ANGULAR: MACH	±1°
ANGULAR: BEND	±5°
ONE PLACE DECIMAL	±0.1
TWO PLACE DECIMAL	±0.01
THREE PLACE DECIMAL	±0.005
FOUR PLACE DECIMAL	±0.0005

MATERIAL: GRAY NYLON 33% GLASS FIBER

FINISH: DEBURRED

DO NOT SCALE DRAWING

	NAME	DATE
CHECKED	NM	10/1/24
ENG APPR.		
MFG APPR.		
Q.A.		

AndyMark

TITLE:

25T 20DP 14.5PA
0.375IN HEX BORE GEAR

SIZE	DWG. NO.	REV
B	am-5020_25	1

SCALE: 2:1 | SHEET 1 OF 1